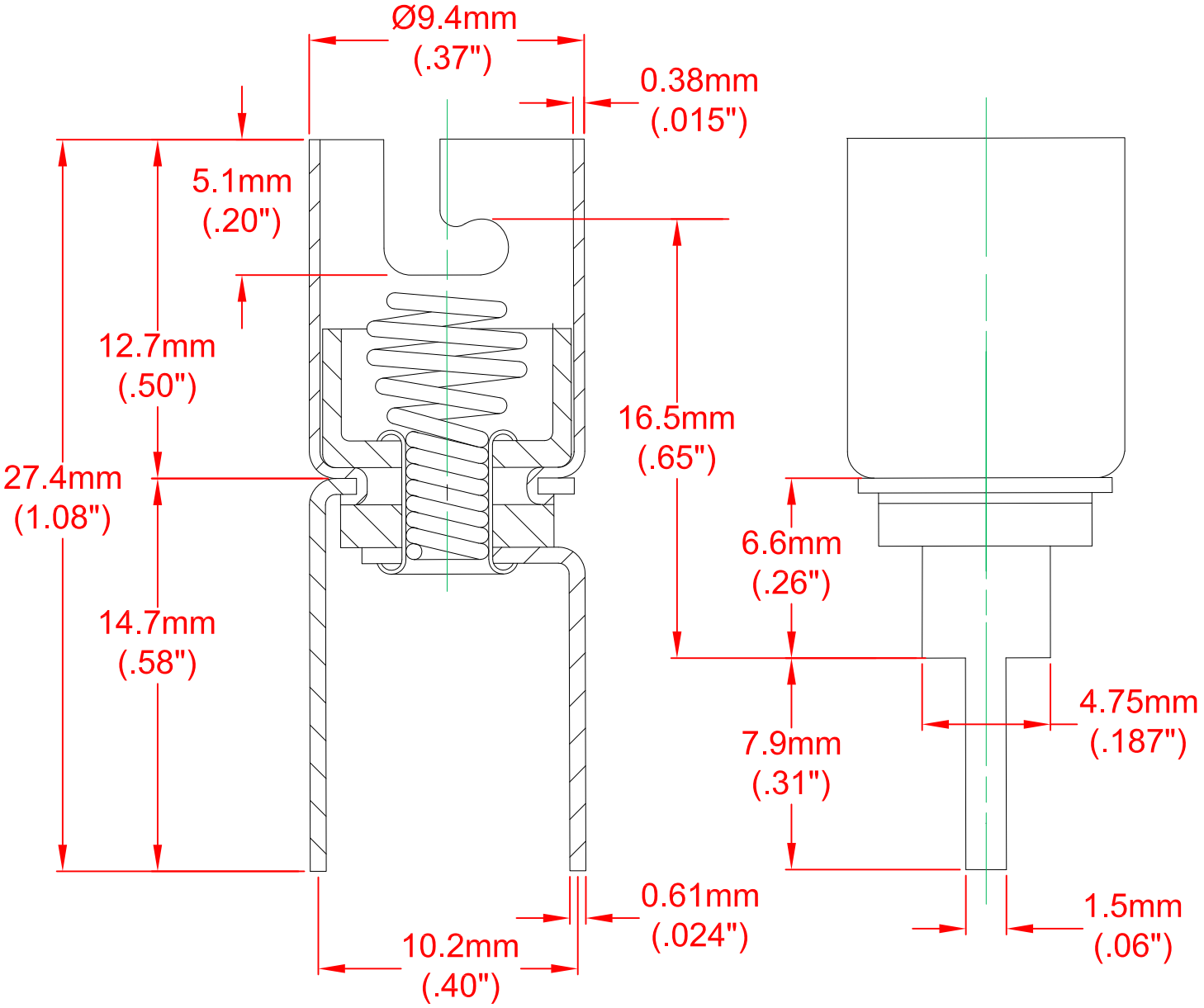

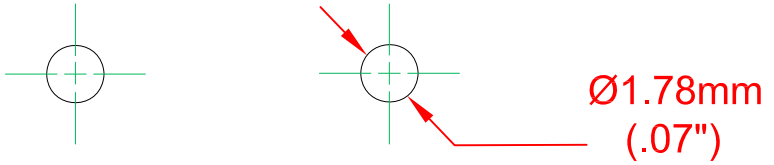

Recommended Hole Pattern for PCB

MATERIALS
Contacts - Steel, Tin Plate
Shell - Steel, Zinc Plate
Spring - Spring Steel
Insulators - Nylon 66 or Bakelite

REV. NO.	DESCRIPTION/ECO NUMBER	APPV'D DATE
	RELEASE & CANCEL P-1106-01	620/11

METRIC THIRD ANGLE PROJECTION	DIMENSIONS ARE IN MILLIMETERS (INCHES) TOLERANCE UNLESS OTHERWISE SPECIFIED ARE REFERENCE ONLY	JKL COMPONENTS CORPORATION					
		TITLE T-3 1/4 MINIATURE BAYONET SOCKET					
DRAWN BY L. WENGSTROM	APPV'D BY L.R. DATE 6/20/11	SIZE A	FSCM NO. 55335	DRAWING NO. 29MB-35			
- CAD DRAWING - MANUAL REVISIONS NOT PERMITTED		SCALE NONE		RELEASED DATE 6/20/11	REVISION DATE	REV. NO.	SHEET 1 OF 1