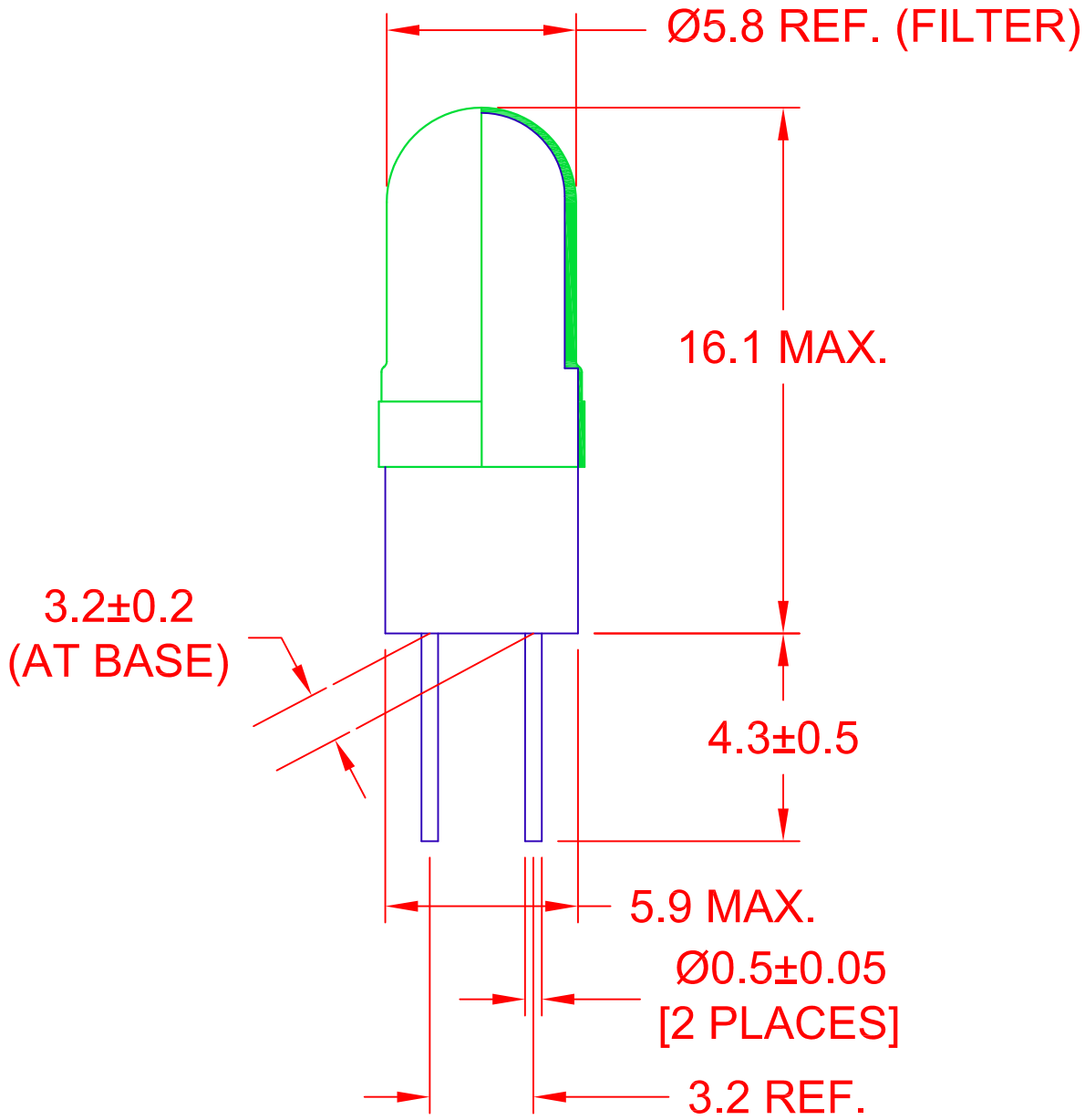

JKL PART NO.: 7373/BLA/39-10-4E**

JKL LAMP NUMBER	VOLTS RATED	AMPS ±10%	*MSCP ±25%	*LUMENS ±25%	AVERAGE LIFE HRS.	FILTER TYPE
7373	14.0	.100	.500	6.0	5,000 D.C.	C-2F

FILTER NO.	BASE COLOR
39-10-4E	BLACK

*LAMP RATED ONLY, NOT WITH BASE OR FILTER.
**LAMP AND BASE ASSEMBLY LEAD (Pb) FREE.

CONTACT JKL FOR LEAD (Pb) FREE LOT IDENTIFICATION.

REV. NO.	DESCRIPTION/ECO NUMBER	APPV'D DATE
A	CAD RELEASE, LEAD (Pb) FREE	12/17/04
	RELEASED	12/16/98

METRIC
THIRD ANGLE PROJECTION

DIMENSIONS ARE IN MILLIMETERS
TOLERANCE UNLESS OTHERWISE SPECIFIED
1 PL +/-
2 PL +/- 0.2
ANGLE +/- 0.20

JKL COMPONENTS CORPORATION

TITLE: T-1 3/4 BI PIN WITH 39-10 FILTER

DRAWN BY	APPV'D BY	DATE	SIZE	FSCM NO.	DRAWING NO.
L. WENGSTROM	JK	12/17/04	A	55335	7373/BLA/39-10-4E

- CAD DRAWING -
MANUAL REVISIONS NOT PERMITTED

SCALE	RELEASED DATE	REVISION DATE	REV. NO.	SHEET
NONE	12/16/98	12/17/04	A	1 OF 1